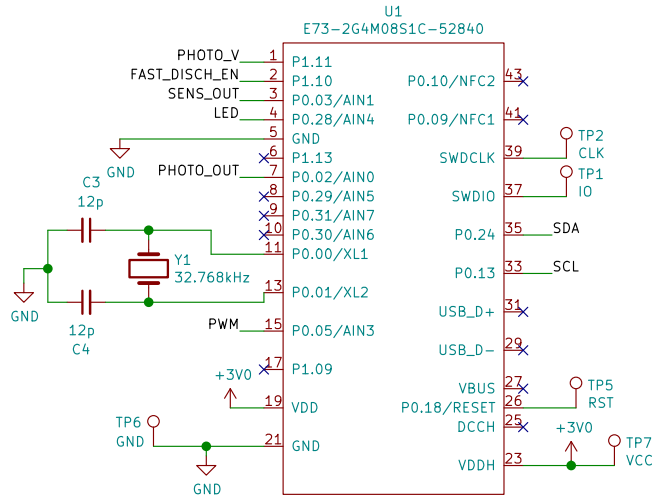

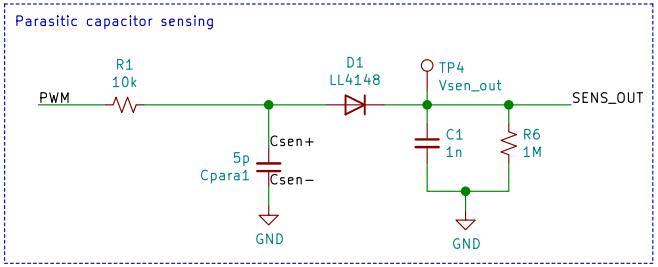

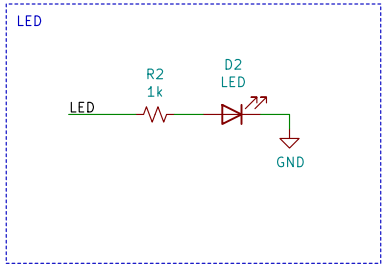

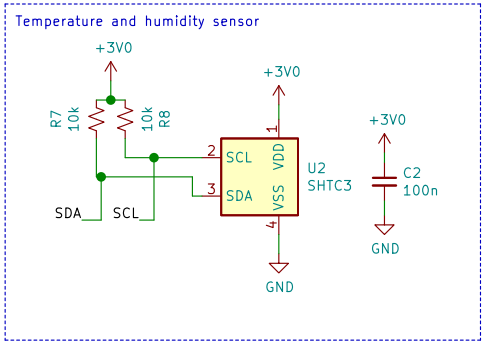

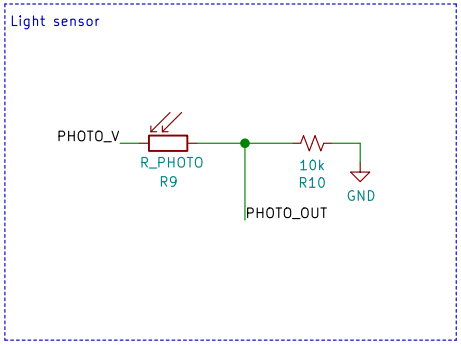

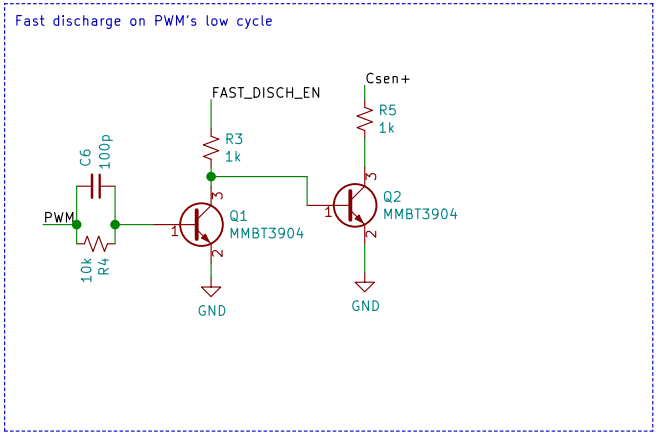

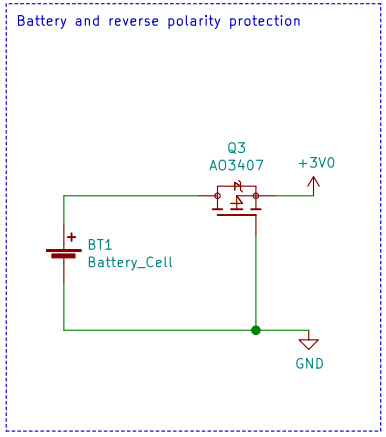

rbaron.net

Sheet: /
File: parasite.sch

Title: b-parasite

Size: A4	Date: 2021-03-12	**Rev: 1.0.0**
KiCad E.D.A. kicad (5.1.10)-1		Id: 1/1